NOTE:
FLAGPOLE & METAL COMPONENTS FURNISHED BY DIVISION 10.

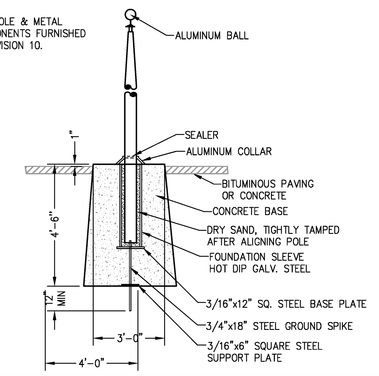

ALUMINUM FLAGPOLE — E2
NOT TO SCALE

NOTES:
1. CONCRETE: 5,000 PSI AFTER 28 DAYS.
2. REINFORCING: 1 LAYER OF 4 X 4/4 X 4 W.W.M.
3. TO ACCOMMODATE A 24" SQ. C.I. FRAME AND GRATE.

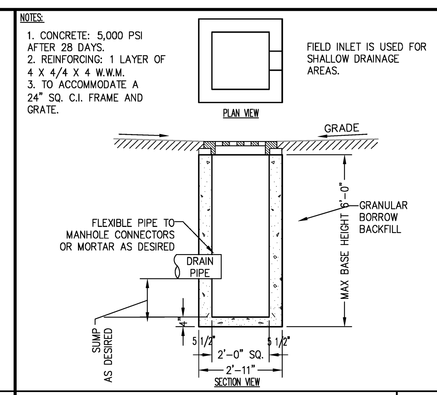

P.C. CONC. DRAIN INLET — E6
NOT TO SCALE

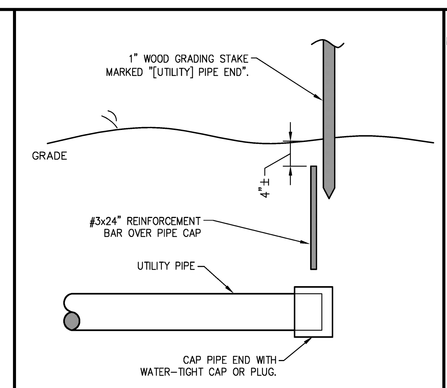

WITNESS STAKE DETAIL — E5
NOT TO SCALE

GENERAL DATA FOR BLOCKING STANDARD FITTINGS
MINIMUM SURFACE AREA OF CONCRETE BLOCK AGAINST UNDISTURBED EARTH – SQ.FT.

PIPE SIZE	HYDRANT, PLUG, CAP, TEE	90° BEND	45° BEND	22.9° BEND	11.25° BEND
4"	4	4	4 6	3 4	2
6"	8	10	10	6 8	3
8"	12	16	14	12	4
10"	18	26	20	16	5
12"	26	36	28	20	7
14"	36	50	36		9
16"	46	64			12

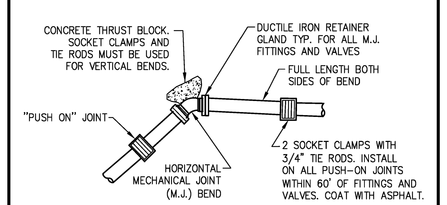

RESTRAINT AT WATER LINE FITTINGS — E4
NOT TO SCALE

NOTE:
THIS DETAIL PERTAINS TO THE NEW FIRE SUPPRESSION WATER STORAGE TANK ONLY.

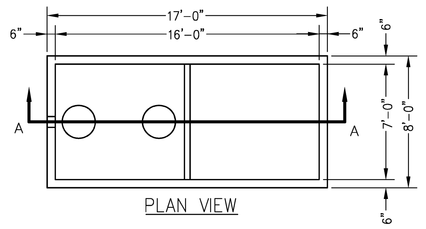

NOTES:
1. CONCRETE: 5000 PSI AFTER 28 DAYS.
2. TONGUE AND GROOVE JOINTS ARE SEALED WITH A STRIP OF BUTYL RUBBER.
3. INLET PIPE SLEEVE CAST IN.
4. HEAVY DUTY COVER: H-20 WHEEL LOADING, TANK DESIGNED TO MEET ACI 318
5. PUMP, PUMP CRADLES, WIRING, FLOAT SWITCHES AND INTERIOR PIPING BY DIVISION 21.
6. EARTHWORK, TANK, TANK PLACEMENT, EXTERIOR PIPING AND CONDUITS TO BUILDING BY DIVISION 31, 32 & 33.

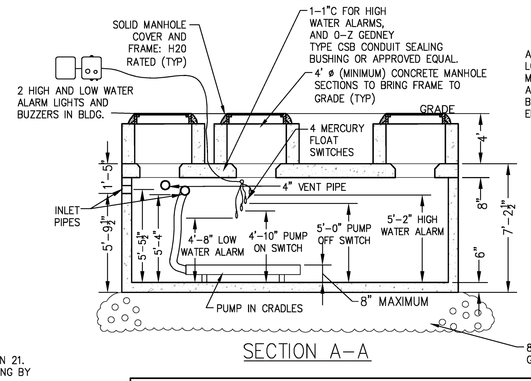

ALSO PROVIDE: 2 STANDARD HIGH AND LOW WATER ALARM LIGHTS, BUZZERS, MERCURY FLOAT SWITCHES, AND APPURTENANCES, MOUNTED IN THE BUILDING AS SHOWN ON THE ELECTRICAL DRAWINGS.

4,000 GALLON PRECAST CONC. WATER TANK — E1
NOT TO SCALE

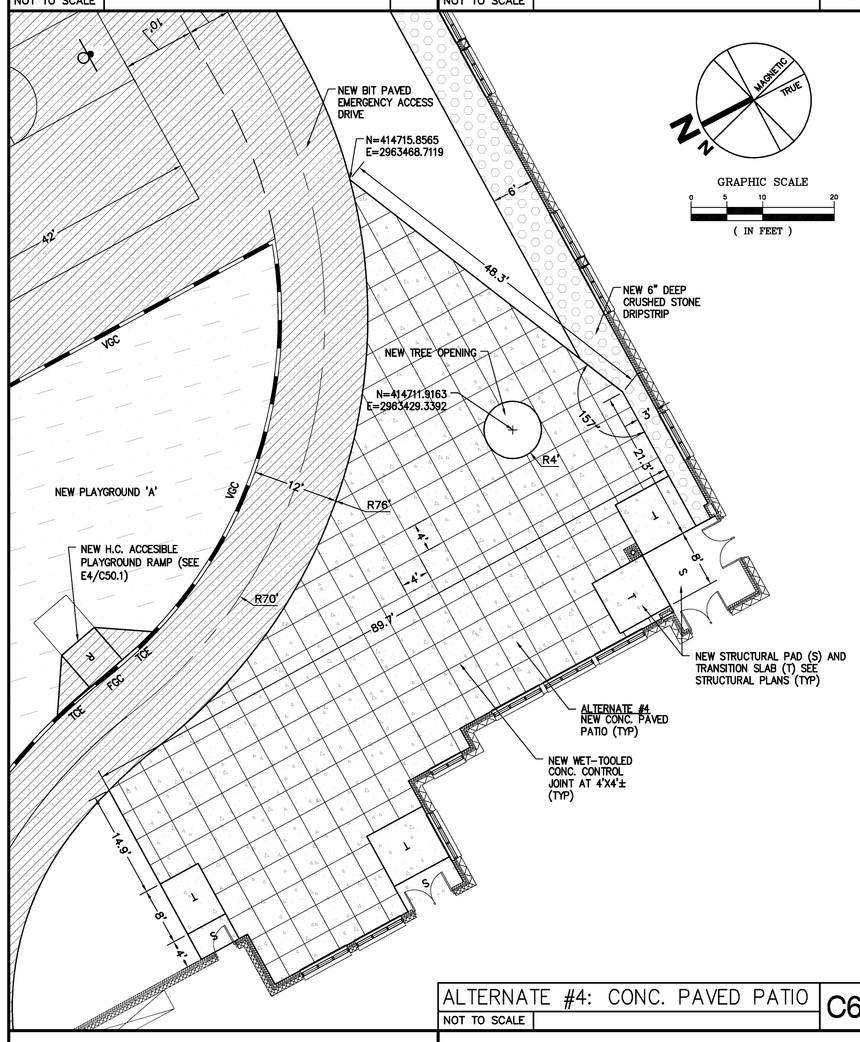

ALTERNATE #4: CONC. PAVED PATIO — C6
NOT TO SCALE

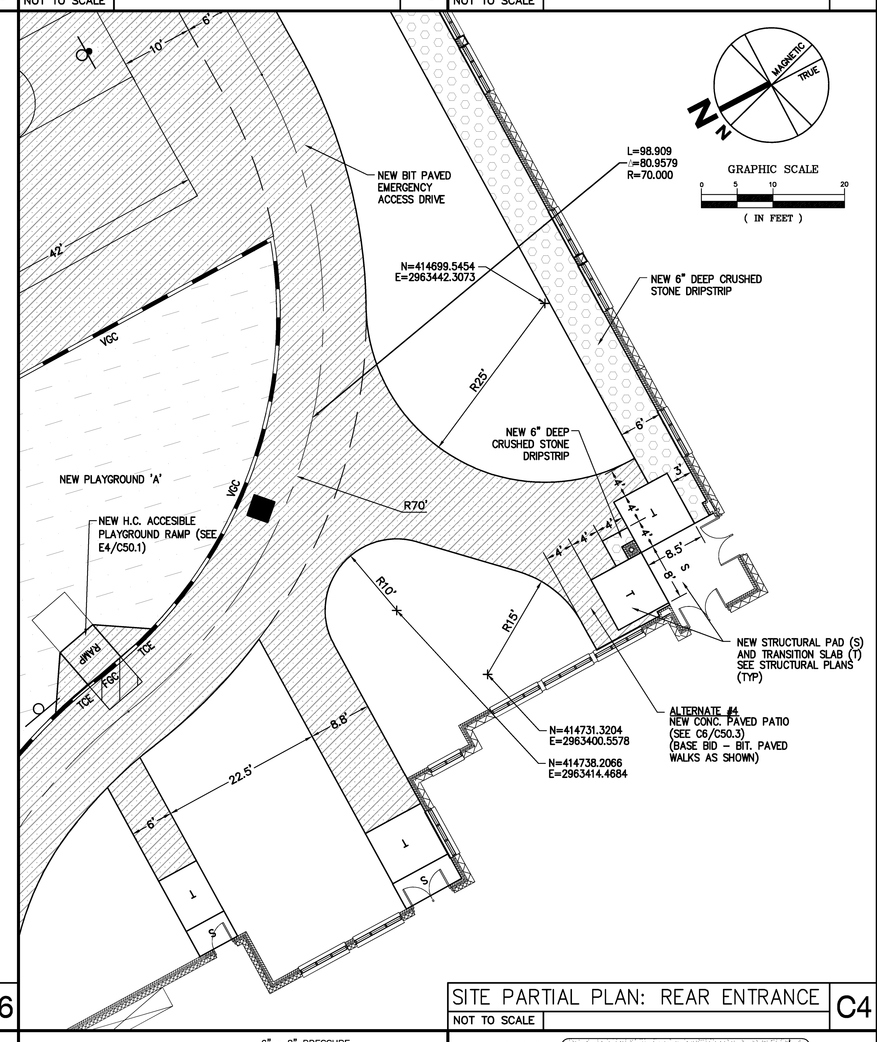

SITE PARTIAL PLAN: REAR ENTRANCE — C4
NOT TO SCALE

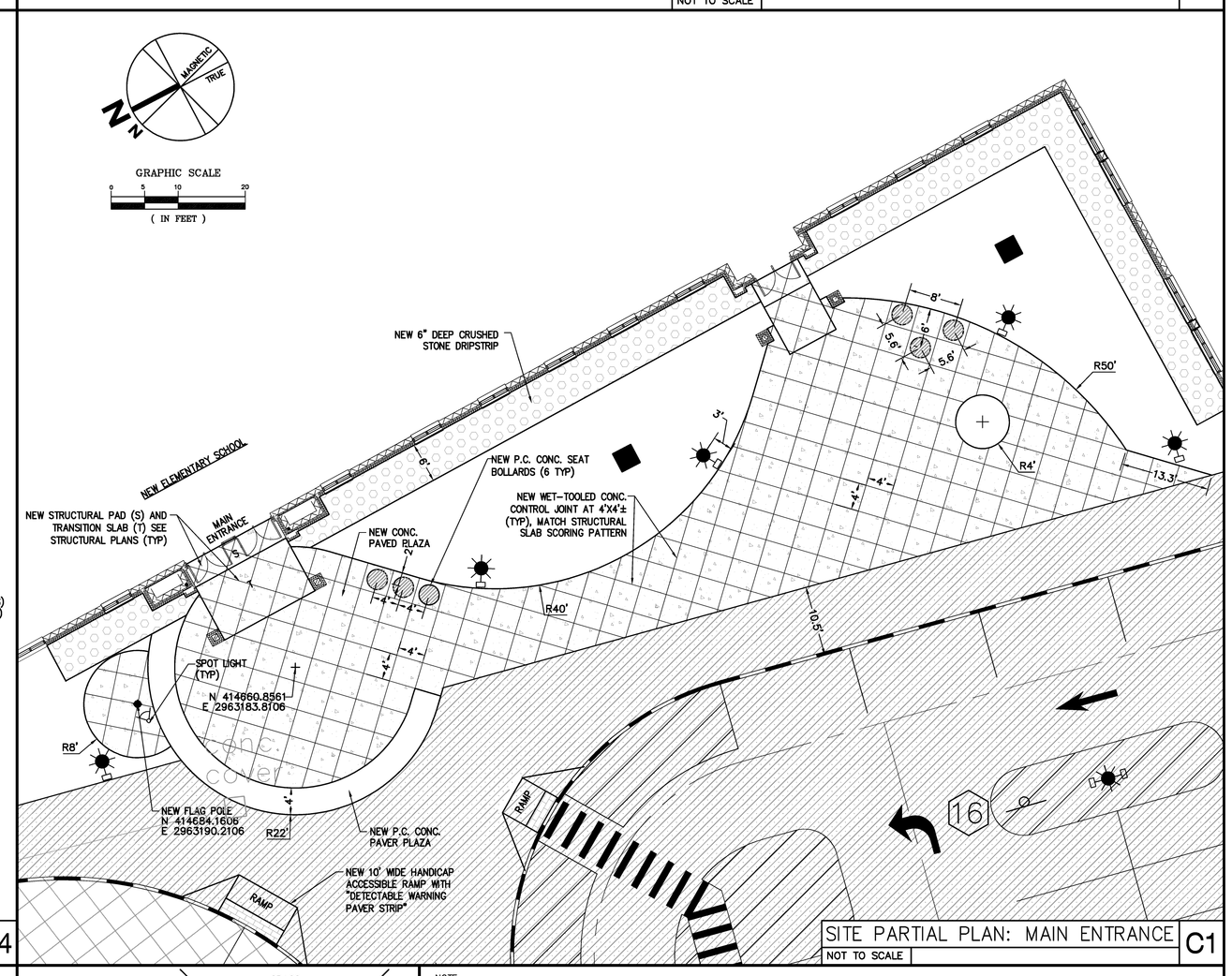

SITE PARTIAL PLAN: MAIN ENTRANCE — C1
NOT TO SCALE

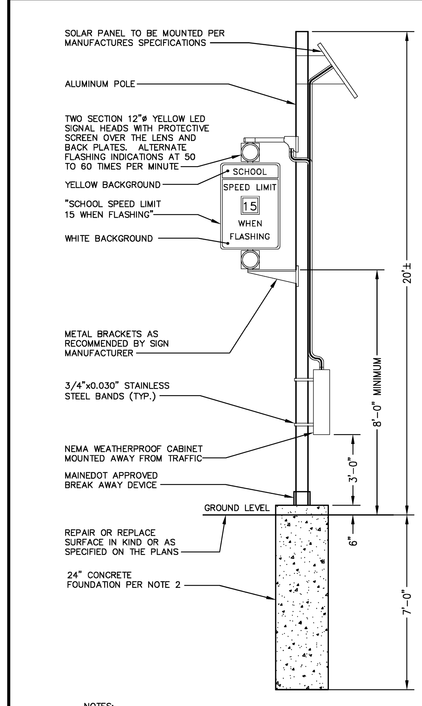

NOTES:
1. SOLAR POWERED SCHOOL SIGNAL EQUIPMENT BY NORTHWEST POWER CO, X6 HR. FLASHER, OR APPROVED EQUAL.
2. ALL MATERIALS AND SPECIFICATIONS WHERE APPLICABLE SHALL MEET THE LATEST EDITIONS OF THE STATE OF MAINE, DEPARTMENT OF TRANSPORTATION, STANDARD DETAILS, HIGHWAYS AND BRIDGES AND THE CURRENT EDITION OF THE MUTCD.
3. TEXT DESIGN: LETTERS, DIGITS, SYMBOLS, SPACINGS, AND TEXT DIMENSIONS SHALL CONFORM WITH THE STANDARD ALPHABETS AND DESIGNS PRESCRIBED IN THE MANUAL ON UNIFORM TRAFFIC CONTROL DEVICES.
4. COLOR: THE SIGN SHOWN SHALL HAVE BLACK TEXT AND SYMBOLS ON REFLECTORIZED YELLOW OR WHITE BACKGROUND. THE COLORS SHALL CONFORM WITH THE CURRENT EDITION OF THE MUTCD.
5. THE TIME CLOCK SHALL BE A NAZTEC CHRONOMAX OR EQUIVALENT CAPABLE OF BEING PROGRAMMED WITH A ONE YEAR SCHOOL CALENDAR.

SCHOOL ZONE FLASHER DETAIL — A7
NOT TO SCALE

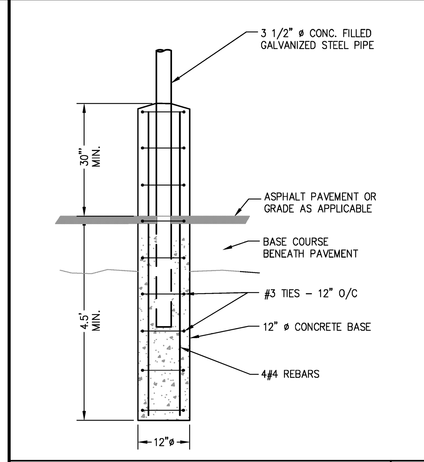

BASKETBALL POST — B6
NOT TO SCALE

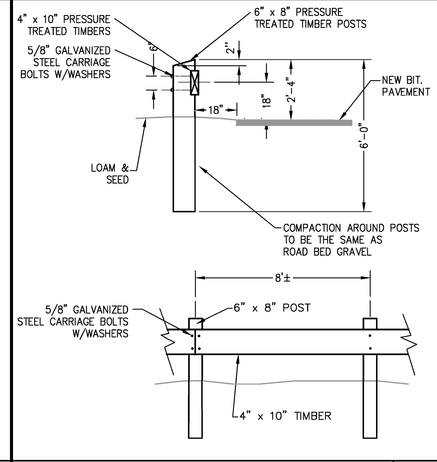

WOODED GUARDRAIL — B5
NOT TO SCALE

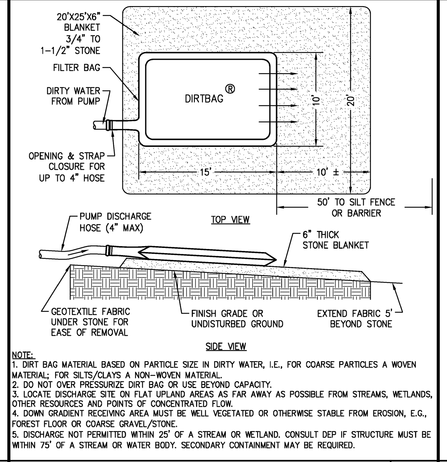

NOTE:
1. DIRT BAG MATERIAL BASED ON PARTICLE SIZE IN DIRTY WATER, I.E., FOR COARSE PARTICLES A WOVEN MATERIAL; FOR SILTS/CLAYS A NON-WOVEN MATERIAL.
2. DO NOT OVER PRESSURIZE DIRT BAG OR USE BEYOND CAPACITY.
3. LOCATE DISCHARGE SITE ON FLAT UPLAND AREAS AS FAR AWAY AS POSSIBLE FROM STREAMS, WETLANDS, OTHER RESOURCES AND POINTS OF CONCENTRATED FLOW.
4. DOWN GRADIENT RECEIVING AREA MUST BE WELL VEGETATED OR OTHERWISE STABLE FROM EROSION, E.G., FOREST FLOOR OR COARSE GRAVEL/STONE.
5. DISCHARGE NOT PERMITTED WITHIN 25' OF A STREAM OR WETLAND. CONSULT DEP IF STRUCTURE MUST BE WITHIN 75' OF A STREAM OR WATER BODY. SECONDARY CONTAINMENT MAY BE REQUIRED.

PUMPED DISCHARGE SEDIMENT CONTROL DEVICE — B4
NOT TO SCALE

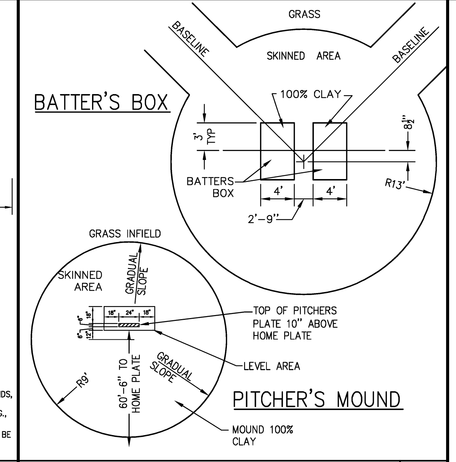

BASEBALL FIELD DETAILS — B3
NOT TO SCALE

NOTE:
SLAB DESIGN BASED ON SOIL FILL AT LEAST TO TOP OF TANK.

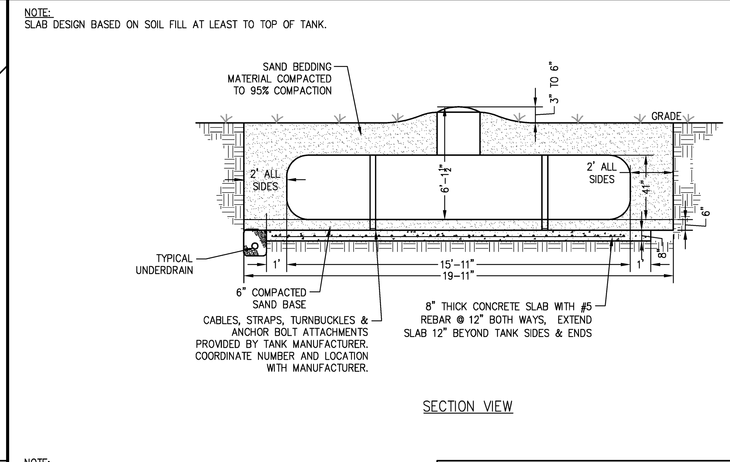

NOTE:
1. TANK, ACCESSORIES, & PIPING BY DIVISION 22.
2. EARTHWORK, CONCRETE SLAB, & TANK PLACEMENT BY DIVISION 31, 32 & 33.

UNDERGROUND LP TANKS — B1
NOT TO SCALE

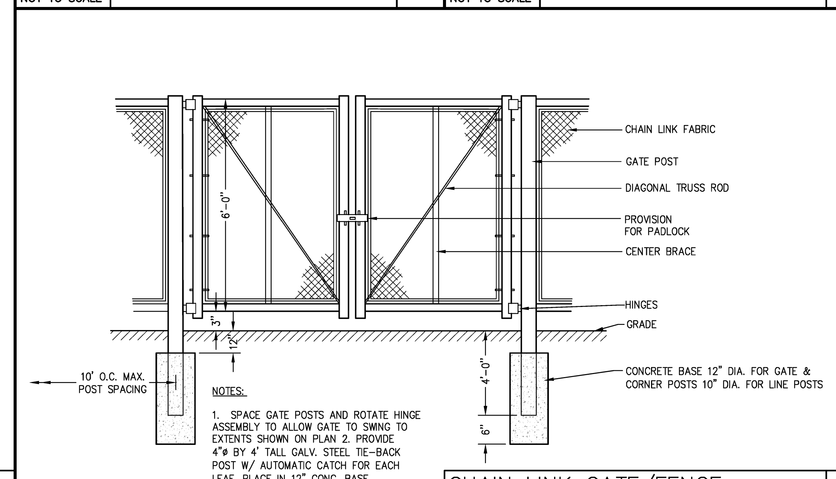

NOTES:
1. SPACE GATE POSTS AND ROTATE HINGE ASSEMBLY TO ALLOW GATE TO SWING TO EXTENTS SHOWN ON PLAN 2. PROVIDE 4"ø BY 4' TALL GALV. STEEL TIE-BACK POST W/ AUTOMATIC CATCH FOR EACH LEAF. PLACE IN 12" CONC. BASE AS SHOWN FOR FENCE POSTS.

CHAIN LINK GATE/FENCE — A5
NOT TO SCALE

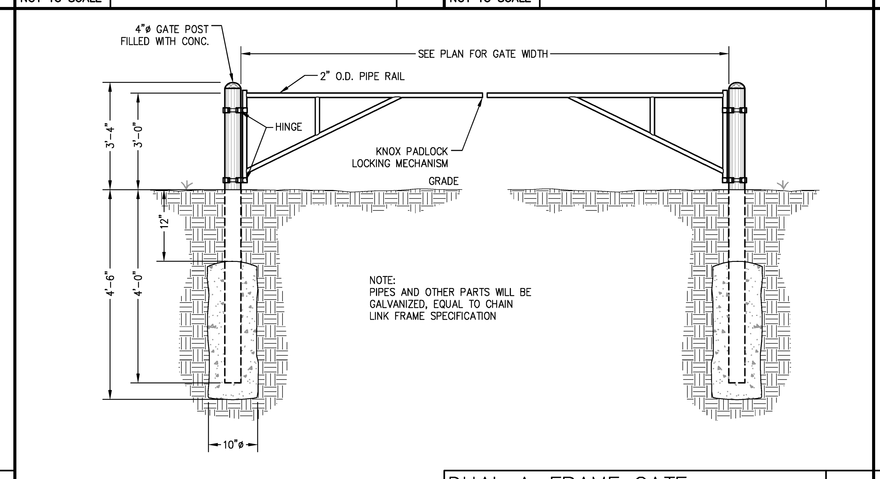

DUAL A-FRAME GATE — A3
NOT TO SCALE

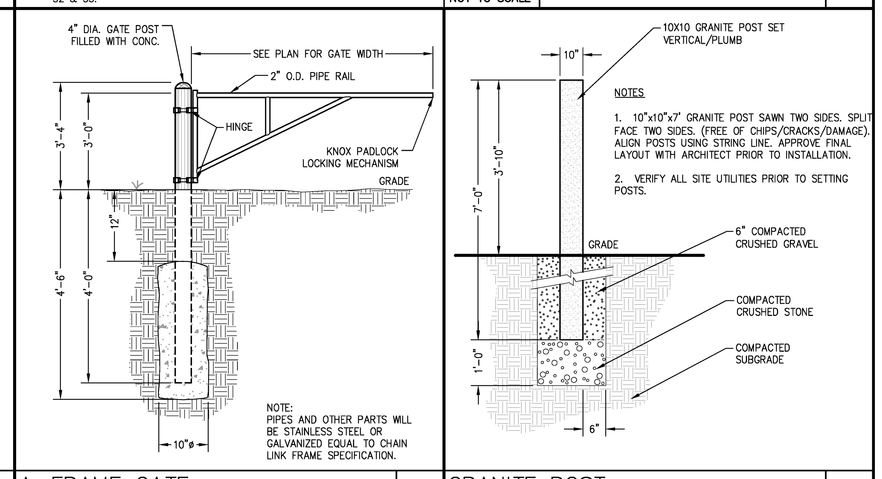

A-FRAME GATE — A2
NOT TO SCALE

GRANITE POST — A1
NOT TO SCALE

HARRIMAN
Architects + Engineers
Auburn Business Park
46 Harriman Drive
Auburn, Maine 04210
207.784.5100 tel
207.782.3017 fax
123 Middle Street
Portland, Maine 04101
207.775.0053 tel
207.775.0460 fax
www.harriman.com

© 2008

STATE OF MAINE — FRANK L. CRABTREE No. 3993 — LICENSED PROFESSIONAL ENGINEER

Project Title
DURHAM ELEMENTARY SCHOOL
DURHAM, ME

HA Project No. 06114

Key Plan

NOTES:
1. SURVEY PREPARED BY A.R.C.C. LAND SURVEYORS INC., OF AUBURN, ME DATED 02-21-07.
2. WETLAND DELINEATION DONE BY S.W. COLE ENGINEERING, INC., UNDER DIRECTION OF CHARLES H. LYMAN, WETLAND SCIENTIST, IN "WETLAND DELINEATION REPORT, PROPOSED DURHAM ELEMENTARY SCHOOL, DURHAM, MAINE", DATED 07-12-06.
3. B-1 – B-5 COMPLETED JUNE 2006. SOIL TEST BORINGS DONE BY S.W. COLE ENGINEERING, INC. UNDER THE DIRECTION OF TIMOTHY J. BOYCE, PE #9263 IN A REPORT TITLED "GEOTECHNICAL ENGINEERING SERVICES PROPOSED DURHAM ELEMENTARY SCHOOL 654 HALLOWELL ROAD DURHAM, MAINE", DATED MAY 21, 2008.
4. P-2 – P-3 COMPLETED DECEMBER 1999. SOIL TEST BORINGS DONE BY S.W. COLE ENGINEERING, INC. UNDER THE DIRECTION OF TIMOTHY J. BOYCE, PE #9263 IN A REPORT TITLED "GEOTECHNICAL ENGINEERING SERVICES PROPOSED DURHAM ELEMENTARY SCHOOL 654 HALLOWELL ROAD DURHAM, MAINE", DATED MAY 21, 2008.
5. B-101 – B-106 COMPLETED JANUARY 2008. SOIL TEST BORINGS DONE BY S.W. COLE ENGINEERING, INC. UNDER THE DIRECTION OF TIMOTHY J. BOYCE, PE #9263 IN A REPORT TITLED "GEOTECHNICAL ENGINEERING SERVICES PROPOSED DURHAM ELEMENTARY SCHOOL 654 HALLOWELL ROAD DURHAM, MAINE", DATED MAY 21, 2008.
6. B-305 – B-307 COMPLETED MAY 2008. SOIL TEST BORINGS DONE BY S.W. COLE ENGINEERING, INC. UNDER THE DIRECTION OF STEVEN R. PINETTE, CG #204 IN A REPORT TITLED "GROUNDWATER MOUNDING AND NITRATE ASSESMENT SUBSURFACE WASTEWATER DISPOSAL AREA PROPOSED NEW DURHAM ELEMENTARY SCHOOL", DATED JULY 24, 2008.
7. TP 100 – TP 124 COMPLETED DECEMBER 2007. SOIL TEST PITS DONE BY S.W. COLE ENGINEERING, INC. UNDER THE DIRECTION OF STEVE H. HOWELL, C.S.S. #33187 IN A REPORT TITLED "CLASS B – HIGH INTENSITY SOIL SURVEY PROPOSED DURHAM ELEMENTARY SCHOOL, DURHAM SCHOOL DEPARTMENT, DURHAM, MAINE", DATED JANUARY 28, 2008.
8. GOETHERMAL ASSESSMENT DONE BY S.W. COLE ENGINEERING, INC. UNDER THE DIRECTION OF STEVEN R. PINETTE, C.G. # 204 IN A REPORT TITLED "FINAL REPORT GEOTHERMAL ASSESSMENT DURHAM ELEMENTARY SCHOOL DURHAM, MAINE", DATED APRIL 4, 2007.

Mark	Date	Description
–	11-13-08	ISSUED FOR BID
–	9-24-08	95% REVIEW
–	6-27-08	DD REVIEW

Issue Dates

Drawing Status

Drawing Title
SITE DETAILS

PA / PE: FLC | Drawn By: MRL/DPD

Drawing Number
C50.3